MAMMOTH

Assembly Instruction

1

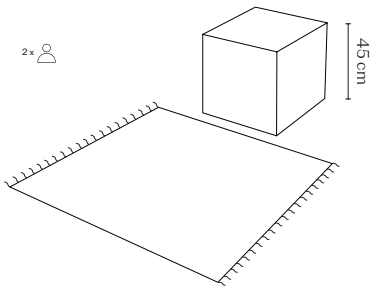

Find a stable object approximately 45 cm high and place a blanket on the floor in front of it.

2

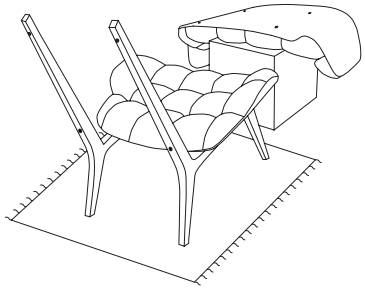

Place the Mammoth backrest on top of the object and position the Mammoth frame on the blanket

3

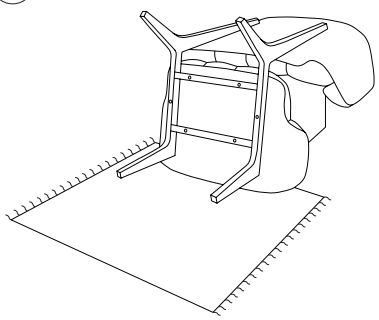

Flip the Mammoth frame onto the backrest. Ensure the screw holes are aligned.

4

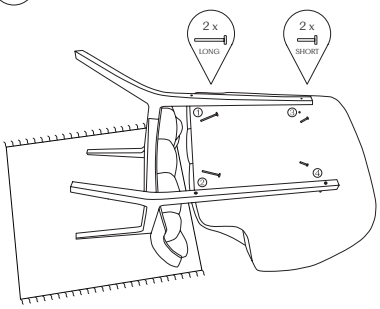

Insert the two large screws into the bottom holes

5

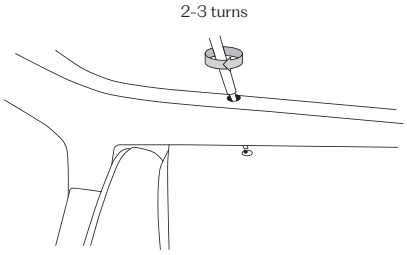

Do not fully tighten any screw at this stage.

6

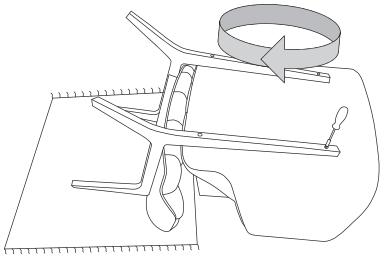

Tighten screws

7

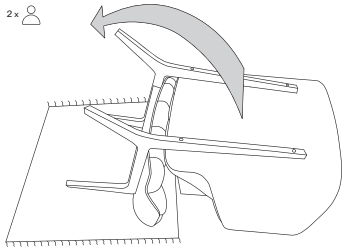

Carefully flip the Mammoth Chair upright, starting with the backside first.

8

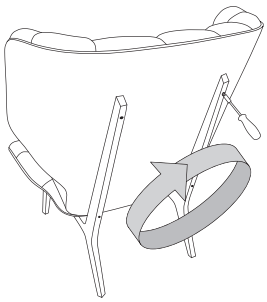

Tighten each screw until they are completely tight.